CMPE243-S02 LOGIC CIRCUIT DESIGN

PROJECT REPORT

Midterm Project

Combinational Logic Circuit Design

Submitted by:

Zeynep Nisa Kaya (CMPE)

Şimal Ersuz (CMPE)

Sıla Kılınç (CMPE)

Project Supervisor:

Prof. Dr. Nima Jafari Navimipour

Project Mentors:

Assoc.Prof. Dr. Taner Arsan

Assist. Prof. Dr. İlktan Ar

Faculty of Engineering and Natural Sciences

Kadir Has University

Fall 2025

TABLE OF CONTENTS

1 INTRODUCTION 3

2 METHODOLOGY 4

2.1 Problem Definition 4

2.2 Design and Implementation Process 4

2.2.1 Truth Table 4

2.2.2 Karnaough Maps and Boolean Simplification 5

2.2.3 Simulink Implementation 7

2.2.4 Breadboard Implementation 10

2.2.5 Basic Logic Gates and Truth Tables 12

3 MAIN FINDINGS 14

3.1 Analysis of Boolean Functions and Karnaough Map Simplification Results 14

3.2 Gate-Level Designs 14

3.3 Simulation Results (MATLAB Simulink) 15

3.4. Hardware Test Results (Breadboard Implementation) 15

4 DISCUSSION 16

5 CONCLUSION 17

REFERENCES 18

1 INTRODUCTION

Public transportation systems are holding a crucial part in the infrastructre of modern cities and essential for the continuity of people's daily life. These systems must be increasingly faster, smarter and automatic day by day because of the transportation need caused by population growth. From this perspective, digital logic design is a fundamental tool in order to model electronic circuits and automation of the real-life decision-making steps.

For the purposes of this project, a combinational logic circuit that takes a 4-bit bus number (S_3, S_2, S_1, S_0) then generates the corresponding 4-bit stop code (Y_3, Y_2, Y_1, Y_0) was designed. The project, under the name of "Smart Bus Route Selector", is based on converting a given bus ID value to accurate stop code. In the system, each output bit has own Boolean function and all outputs were created independently by using the same input signals.

Design process consists of four primary phases:

1. Creating the truth table which identifies the connection between bus numbers and stop numbers,
2. Simplifying the Boolean expressions for each output bit by using Karnaugh Maps (K-Map),
3. Verifying the simplified expressions in MATLAB Simulink by the simulation of logic gates,
4. Eventually, the circuit is physically implemented on the breadboard by utilizing integrated circuits 7404 (NOT), 7408 (AND) and 7432 (OR).

Through this project; simplifying logic circuits, Boolean algebra and the process of creating a real circuit on both simulation and hardware were experienced. The project strengthened the connection between theoretical knowledge and implementation.

2 METHODOLOGY

2.1 Problem Definition

The main goal of this project is to design a combinational logic circuit which takes 4-bit bus number as an input and outputs the corresponding 4-bit stop code. The system automatically determines which given bus ID corresponds which stop number.

Inputs are S_3, S_2 , S_1, S_0 and representing bus numbers; outputs are Y_3, Y_2, Y_1, Y_0 and representing stop code. Each output bit has own Boolean function but sharing the same inputs. The aim of project, simplifying this functions, then designing a minimal circuit on Simulink and breadboard accurately.

Within this scope:

1. A truth table is created for bus ID and stop code matchings,
2. Karnaugh Maps (K-Map) for each output were created, then the Boolean expressions are simplified,
3. Simplified equations are tested on MATLAB Simulink and verified,
4. In the final stage the circuit is physically implemented on the breadboard by utilizing integrated circuits 7404 (NOT), 7408 (AND) and 7432 (OR).

Through this method, both practical circuit design and theoretical simplification are combined.

2.2 Design and Implementation Process

2.2.1 Truth Table

The bus number-stop code mappings are given in the Table 1. Basic data structure of the design is created by evaluation of binary equivalents (S_3 S_2 S_1 S_0) and stop codes (Y_3 Y_2 Y_1 Y_0) together.

Table 2.1 Bus Number to Stop Code Mapping

Bus No (0-15)	Binary (S_3 S_2 S_1 S_0)	Stop Code (Y_3 Y_2 Y_1 Y_0)
0	0000	0100
1	0001	0100
2	0010	0110
3	0011	0110
4	0100	1101
5	0101	1101
6	0110	1111
7	0111	1111
8	1000	1000
9	1001	1011
10	1010	1011
11	1011	1011
12	1100	1111
13	1101	1111
14	1110	1111
15	1111	1111

2.2.2 Karnaugh Maps and Boolean Simplifications

For each output bit (Y_3, Y_2, Y_1, Y_0) a four variable (S_3, S_2 , S_1, S_0) Karnaugh Map is created and made necessary groupings, then obtained the simplified Boolean functions.

The following Boolean functions were found as a result of the simplifications:

- $Y_3 = S_2 + S_3$
- $Y_2 = S_2 + S_3'$
- $Y_1 = S_1 + S_3S_2 + S_3S_0$
- $Y_0 = S_2 + S_3S_1 + S_3S_0$

Each equation represents a separate combinational circuit; however, all circuits operate within a single system by sharing common inputs.

Table 2.2 Karnaugh Map for Output Y_3

S_1S_0 / S_3S_2	00	01	11	10
00	0	0	0	0
01	1	1	1	1
11	1	1	1	1
10	1	1	1	1

Table 2.3 Karnaugh Map for Output Y_2

S_1S_0 / S_3S_2	00	01	11	10
00	1	1	1	1
01	1	1	1	1
11	1	1	1	1
10	0	0	0	0

Table 2.4 Karnaugh Map for Output Y_1

S_1S_0 / S_3S_2	00	01	11	10
00	0	0	1	1
01	0	0	1	1
11	1	1	1	1
10	0	1	1	1

Table 2.5 Karnaugh Map for Output Y_0

S_1S_0 / S_3S_2	00	01	11	10
00	0	0	0	0
01	1	1	1	1
11	1	1	1	1
10	0	1	1	1

2.2.3 Simulink Implementation

Simplified Boolean functions are modeled on MATLAB Simulink by utilizing AND, NOT and OR blocks.

Each input combination (0-15) was tested and verified that the Simulink outputs were fully same with the truth table.

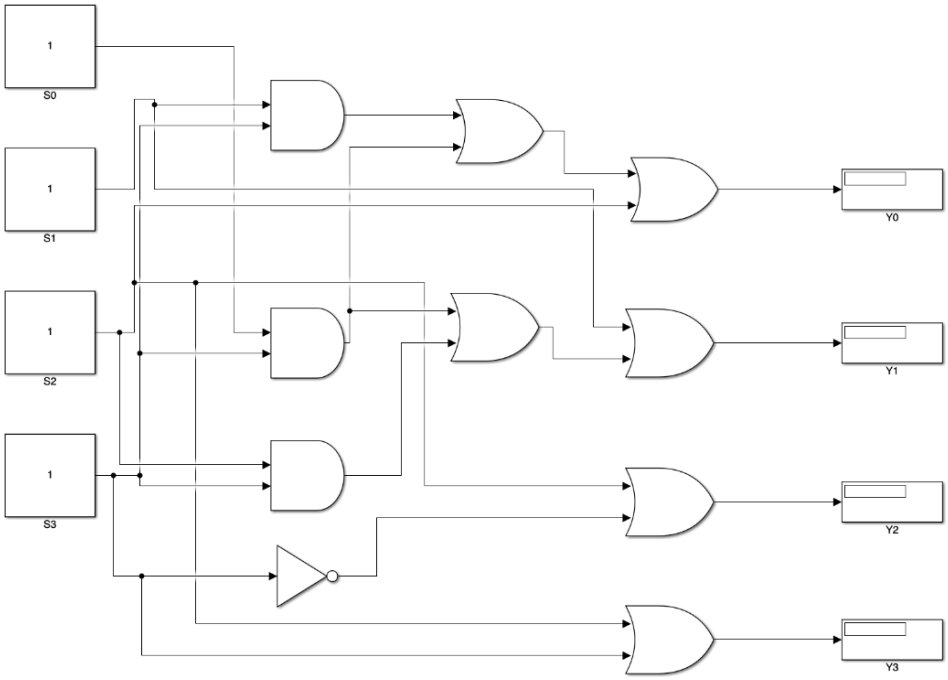

Figure 2.1 Overall Simulink Model of the Smart Bus Route Selector System

All output bits (Y_3-Y_0) are combined into a single model, sharing the same input bits (S_3-S_0).

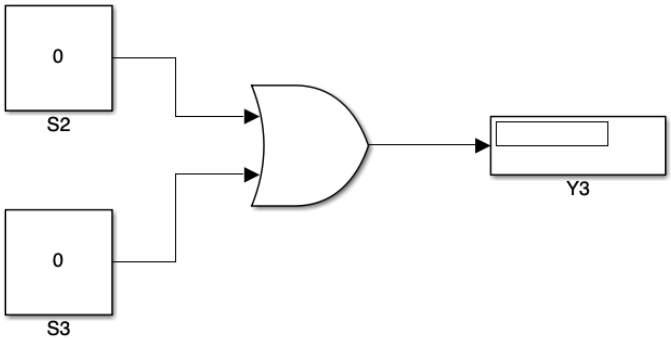

Figure 2.2 Simulink Implementation of Output Y_3

Figure 2 shows the output Y_3 created according to the equation $Y_3 = S_2 + S_3$. The output is generated by connecting the S_2 and S_3 inputs to the OR block.

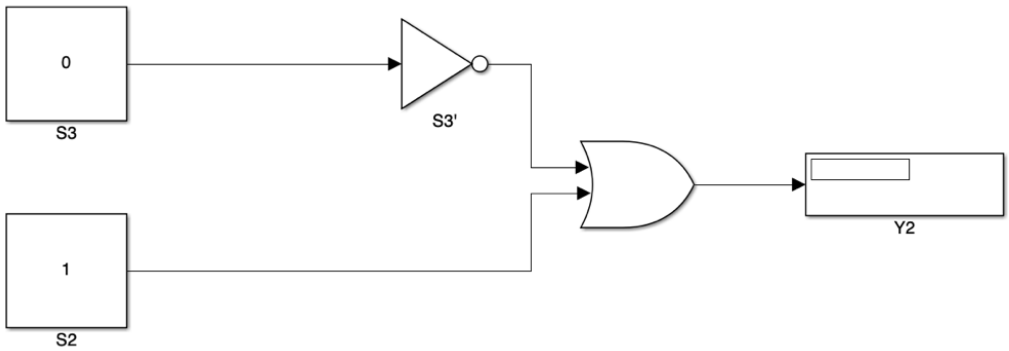

Figure 2.3 Simulink Implementation of Output Y_2

In Figure 3, the Boolean equation $Y_2 = S_2 + S_3'$ for output Y_2 is modeled in Simulink. S_3 is first passed through a NOT block, then combined with S_2 in an OR block.

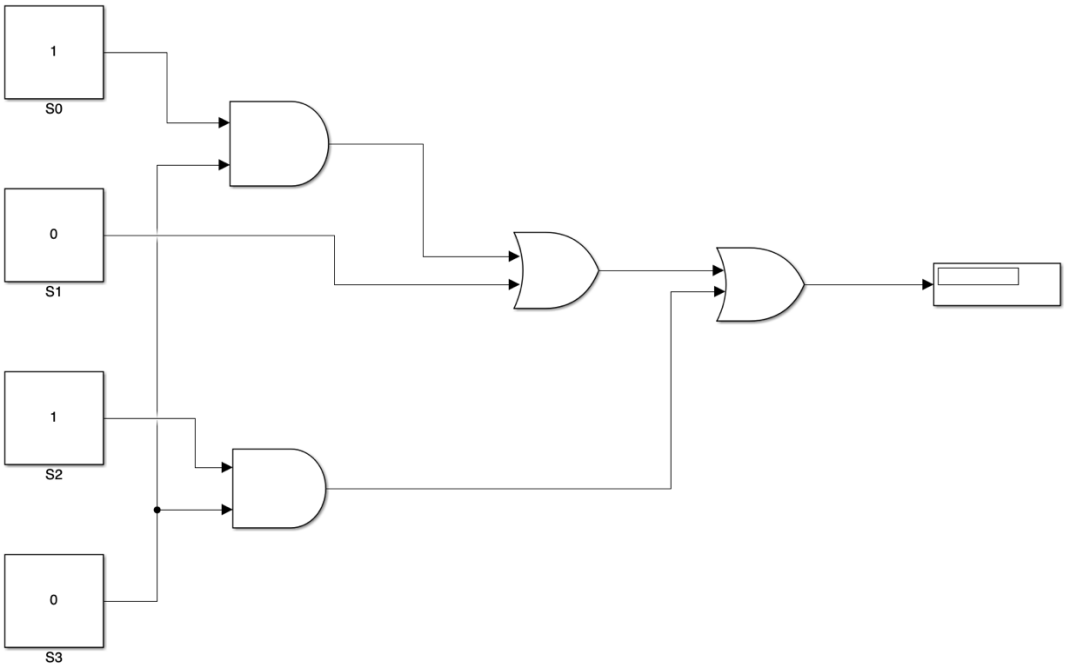

Figure 2.4 Simulink Implementation of Output Y_1

This figure shows the configuration of output Y_1 according to the expression $Y_1 = S_1 + S_2S_3 + S_3S_0$. Two AND blocks and one OR block are used.

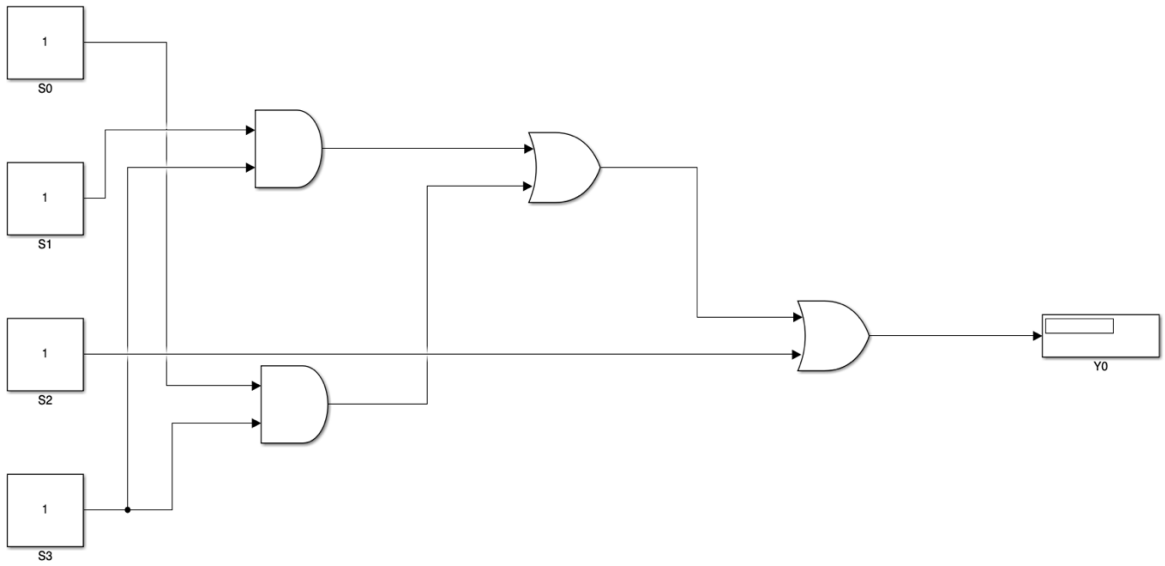

Figure 2.5 Simulink Implementation of Output Y_0

This figure shows the configuration of output Y_0 according to the expression $Y_1 = S_2 + S_1S_3 + S_3S_0$. Two AND blocks and one OR block are used.

2.2.4 Breadboard Implementation

After verifying the Simulink test, circuit is implemented on breadboard. The ICs used in the design are:

- 7404 – NOT gate
- 7408 – AND gate
- 7432 – OR gate

S_3–S_0 inputs are connected to switches, Y_3–Y_0 outputs are displayed with LEDs.

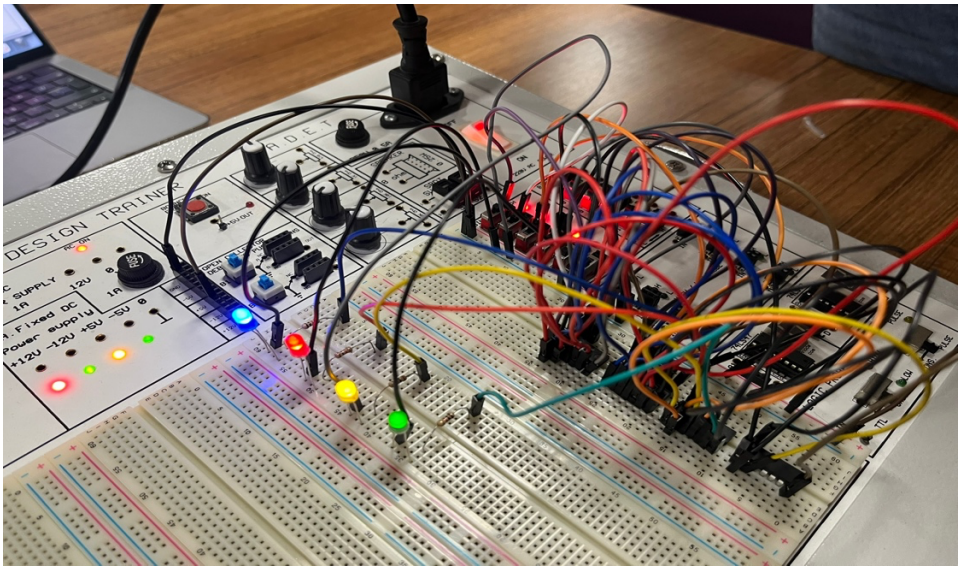

Figure 2.6 Breadboard Circuit Implementation Using 7404, 7408, and 7432 ICs

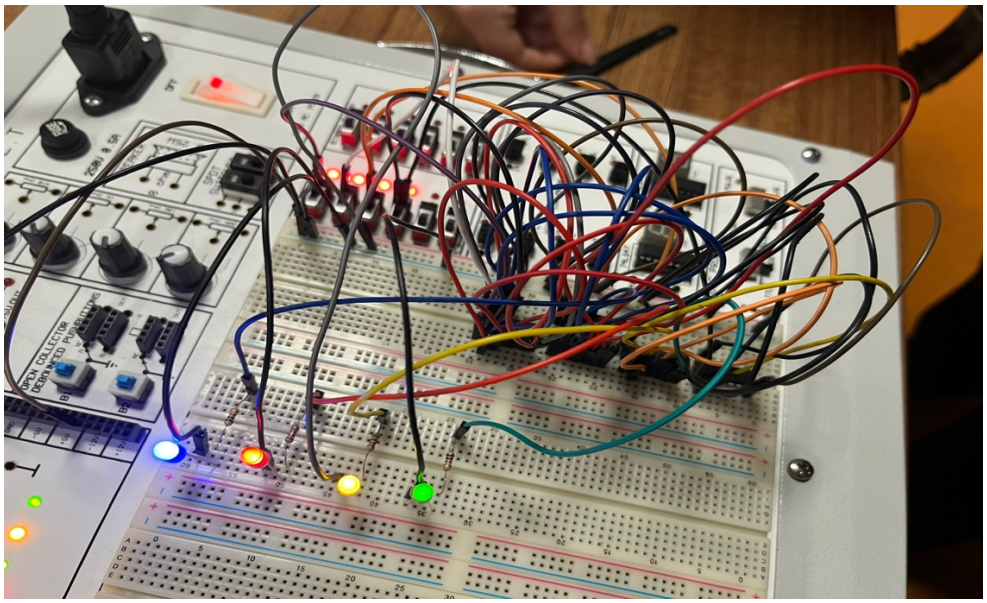

Figure 2.7 LED Output Representation for Test Inputs on Breadboard

Figure 2.7 shows how the Y_3-Y_0 outputs are presented over LEDs because of the input combinations applied to the breadboard circuit. In order to distinguish the outputs easily, each Y line has been represented by different LED colour:

- $Y_0 \rightarrow$ Blue LED
- $Y_1 \rightarrow$ Red LED
- $Y_2 \rightarrow$ Yellow LED
- $Y_3 \rightarrow$ Green LED

Binary values of the LEDs perfectly matched with the expected stop codes in the truth table.

2.2.5 Basic Logic Gates and Truth Tables

Three basic logic gates were utilized in this project: NOT, AND and OR. Input-output behaviors of this gates are showed in the following tables. These tables are important references in order to understand the physical circuit equivalents of Boolean expressions.

Table 2.6 NOT Gate Truth Table

A	A′
0	1
1	0

Table 2.7 AND Gate Truth Table

A	B	A · B
0	0	0
0	1	0
1	0	0
1	1	1

Table 2.8 OR Gate Truth Table

A	B	A + B
0	0	0
0	1	1
1	0	1
1	1	1

3 MAIN FINDINGS

3.1 Analysis of Boolean Functions and Karnaugh Map Simplification Results

After each bus numer-stop code matchings were turned into truth tables, it is determined in which input combinations each output bit (Y_3, Y_2, Y_1, Y_0) is 1, then by using these informations initial Boolean functions are achieved. Minterm lists that are created for each bit, formed the basis of the simplification process.

Following these stages, a four variable Karnaugh maps are prepared and by making largest groupings on the maps, the simpliest Boolean equations are achieved for each output. During the simplification progresses, groups of four and eigth were preferred when it is possible. Thus, gate count that will be used in circuit is reduced to minimum.

The following Boolean functions were found as a result of the simplifications:

- $Y_3 = S_2 + S_3$
- $Y_2 = S_2 + S_3'$
- $Y_1 = S_1 + S_3S_2 + S_3S_0$
- $Y_0 = S_2 + S_3S_1 + S_3S_0$

This results provide a direct basis for the gate-level design of the circuit. Simplified expressions provide logic gates that used on Simulink and breadboard to be accurate and minimal.

3.2 Gate-Level Design

Once simplified Boolean equations are achieved, gate-level design is complited by using basic logic gates. In the final circuit built on the breadboard, only 1 NOT, 1 OR and 2 AND gates were enough to be used. In this way, not only the design was created with minimum count of gates, but also the connection complexity is decreased.

The operations performed by the gates used in the circuit are as follows:

- NOT gate was used to produce the inverse of input S_3 and used for output Y_2.
- OR gate produced the related output values by combining direct inputs such as S_2 and product terms came from AND gates.
- First AND gate created the product term S_3S_2 and this term was used on outputs Y_1 and Y_0.

- Second AND gate created the product term S_3S_0 and same as first one, this term was used on outputs Y_1 and Y_0.

Owing to the minimal gate structure, all output bits (Y_3-Y_0) can be generated independently and accurately despite sharing same input signals.

3.3 Simulation Results (MATLAB Simulink)

Simulink model created using simplified Boolean equations was tested to verify the circuits input-output behaviours.

In the model, all the output bits (Y_0-Y_3) was designed int he same system to share common input signals (S_3-S_0).

During the simulation, all input combinations from 0 to 15 were applied and observed through display blocks. The simulation results are completely matched with all bus number-stop code matches in the truth table. Especially, the relationship between Y_2 and the inverse of S3 and the product terms on the Y_1/Y_0 outputs are clearly seen in the display blocks.

No error situation, delay or any other problems were observed on the simulation outputs. This verification showed that the circuit designed in the CADET system worked logically correctly.

3.4 Hardware Test Results (Breadboard Implementation)

Different input variables 0 to 15 was applied to the breadboard circuit and in all cases, it was seen that the binary values generated by the LEDs matched exactly with the stop code values in the truth table. There were not seen any uncertainty, delay or wrong output. When the input value is changed, circuits produced the correct output instantly. This showed that system worked properly according to combinational logic behavior. Cadet results are completely consistent with the results from the Simulink model. All of them verify that the circuit works properly in both theoretical, simulation and physical implmentation stages.

4 DISCUSSION

The designed circuit that converts bus ID to stop code in this project, worked as expected both on Simulink and breadboard. Changes made at the inputs reflected immediately at the outputs which shows the circuit works without delay. All input value combinations tested on the circuit gave exactly the same outputs with correspondences in the truth table.

The simulation and the physical circuit results were the same. Therefore, this indicates that the simplified Boolean equations were correctly derived and the gate-level design was error free. Especially the correct generation of all outputs by using only 2 AND, 1 NOT and 1 OR gates on breadboard, revealed that the design is both efficient and minimal. Using less count of gate made it easy to build the circuit more orderly and reduced the possibility of error.

Overall, both Simulink model, breadboard application and theoretical calculations are consistent with each other. The system has compeletely achieved the project's objectives by converting the given bus ID input into the correct stop code output. Accurate results and the consistency of results, indicate that the designed circuit was successfully implemented.

5 CONCLUSION

In this project, a combinational digital system that displays the bus's destination stop code based on a 4-bit bus ID was designed and implemented successfully.

For the purpose of this project, at first, the truth table was prepared on paper and created Karnaugh Maps for each output. Thus, simple equations were obtained. MATLAB Simulink was used to test the validity of the equations. After this step the circuit was set up on the CADET system in the laboratory. In the final stage, achieved consistency between truth table, Karnaugh Maps, CADET system, Simulink model, Boolean simplification and breadboard implementation. The results showed that every change made at the inputs is immediately and properly applied at the outputs. Therefore, this indicates that the design fully achieves its objective.

The main benefit of this system is that it makes bus ID-stop code matches automatically and correct. This type of a system is a fundamental base used in real life such as in stop displays, simple addres matching modules, or directional panels.

In conclusion, the accuracy of the project was proven with all the steps. The project has shown that combinational logic principles can work on real problems efficiently.

REFERENCES

[1] M. M. Mano and M. D. Ciletti, *Digital Design*, 4th ed. Upper Saddle River, NJ: Pearson Prentice Hall, 2007.

[2] C. H. Roth, Jr., L. L. Kinney, and E. B. John, *Fundamentals of Logic Design*, 7th ed. Cengage Learning, 2021.